BOX P8--BX 22

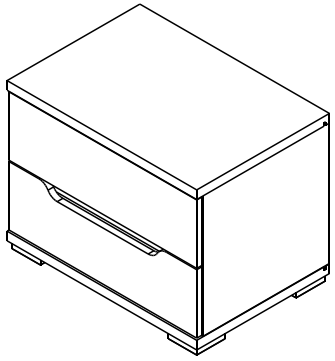

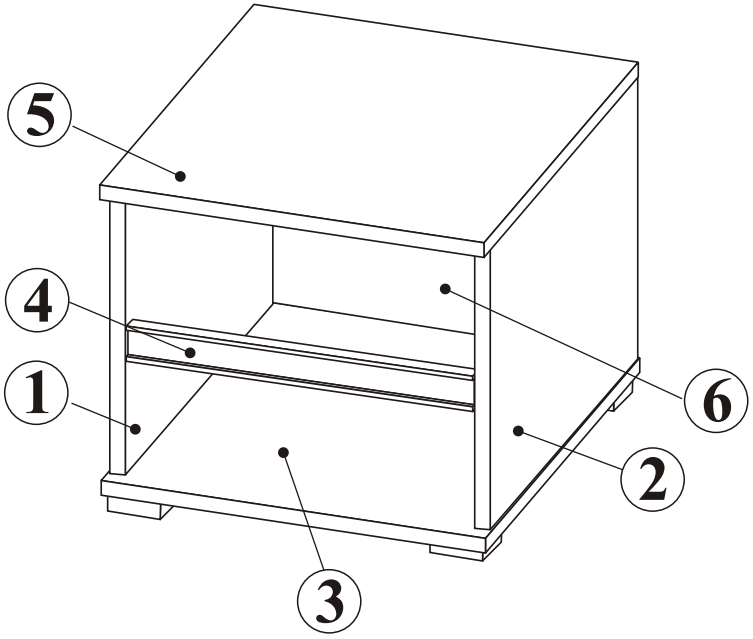

NR 1

- B1 — 8x28 — x8
- B2 — 6x28 — x4
- M1 — x8
- T1 — x8
- J23 — x8
- L1 — x1

NR 2

- R22 — L-300 mm — x2L/2R
- E2 — 6x11 — x12
- P3 — 3x13mm — x8
- S3 — 3,5x13 — x4

NR 3

- N21 — x4
- S2 — x4

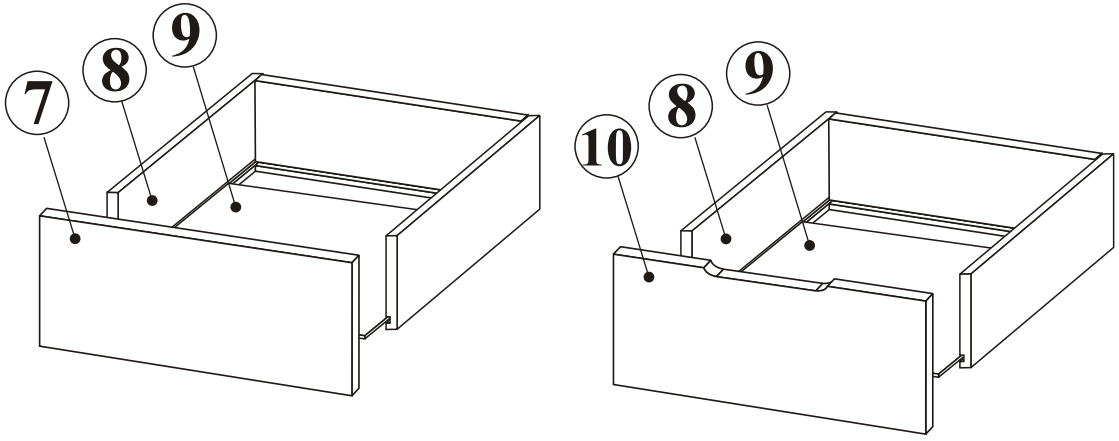

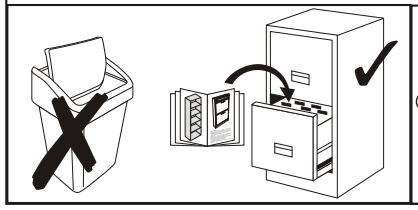

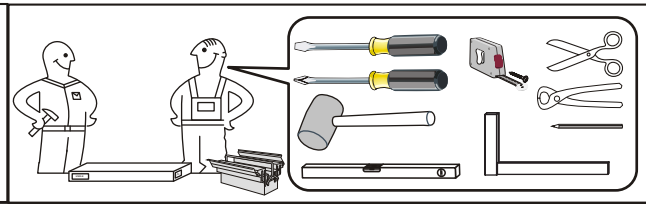

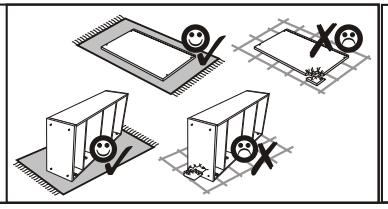

1

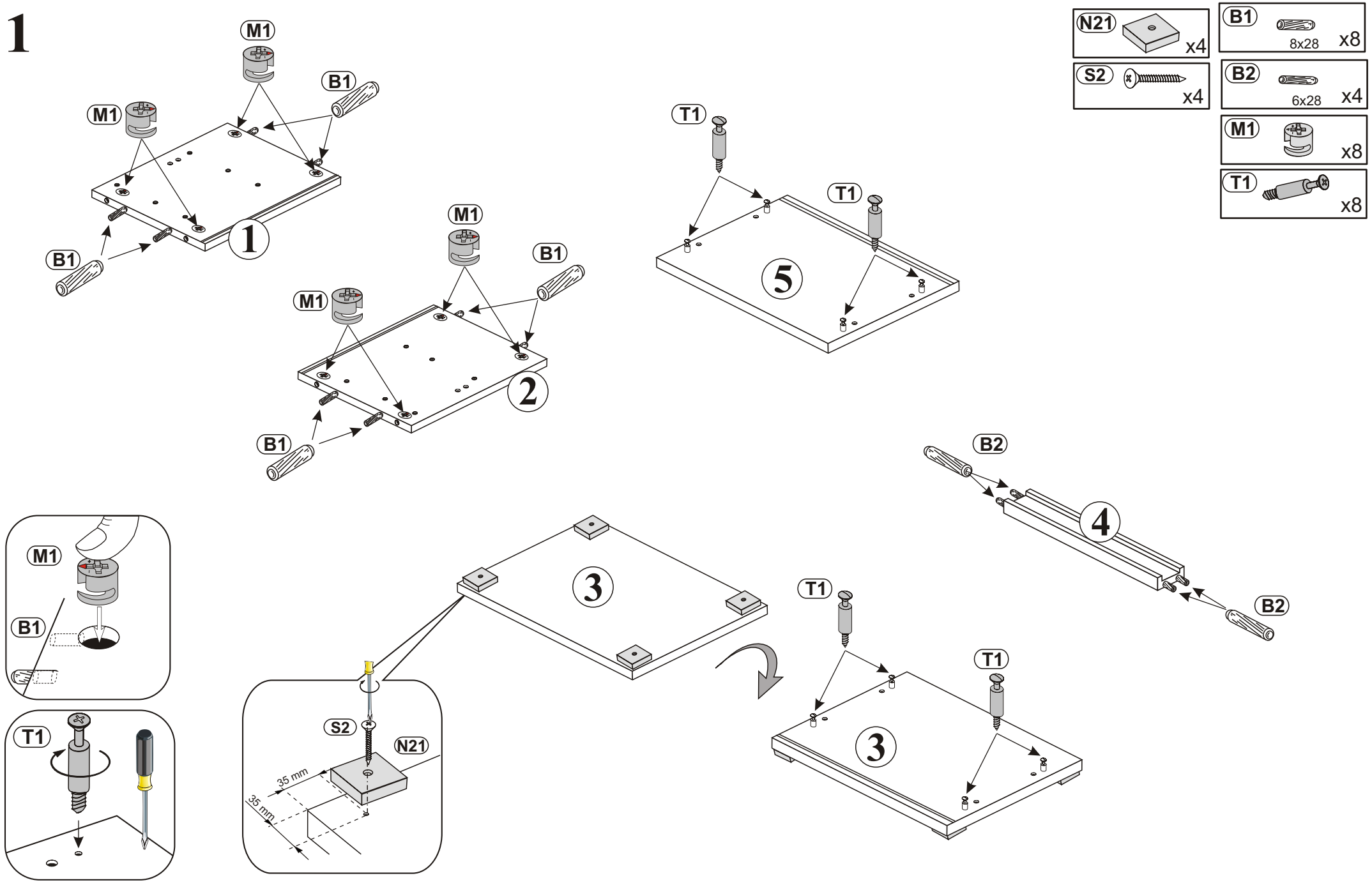
N21 x4
B1 8x28 x8
S2 x4
B2 6x28 x4
M1 x8
T1 x8
M1
B1
1
2
5
T1
B2
4
3
S2
N21
35 mm
35 mm

2

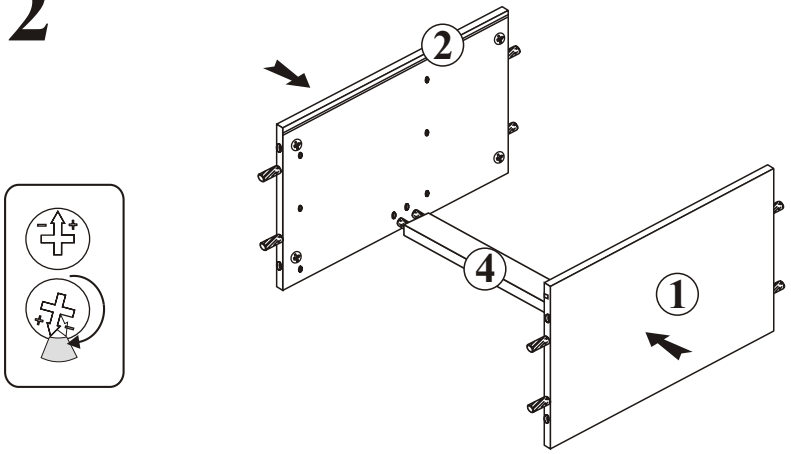
2
4
1

3

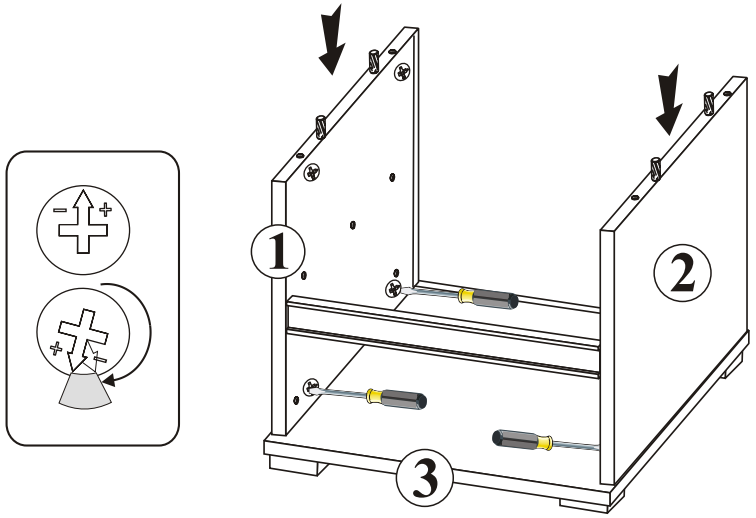
1
2
3

4

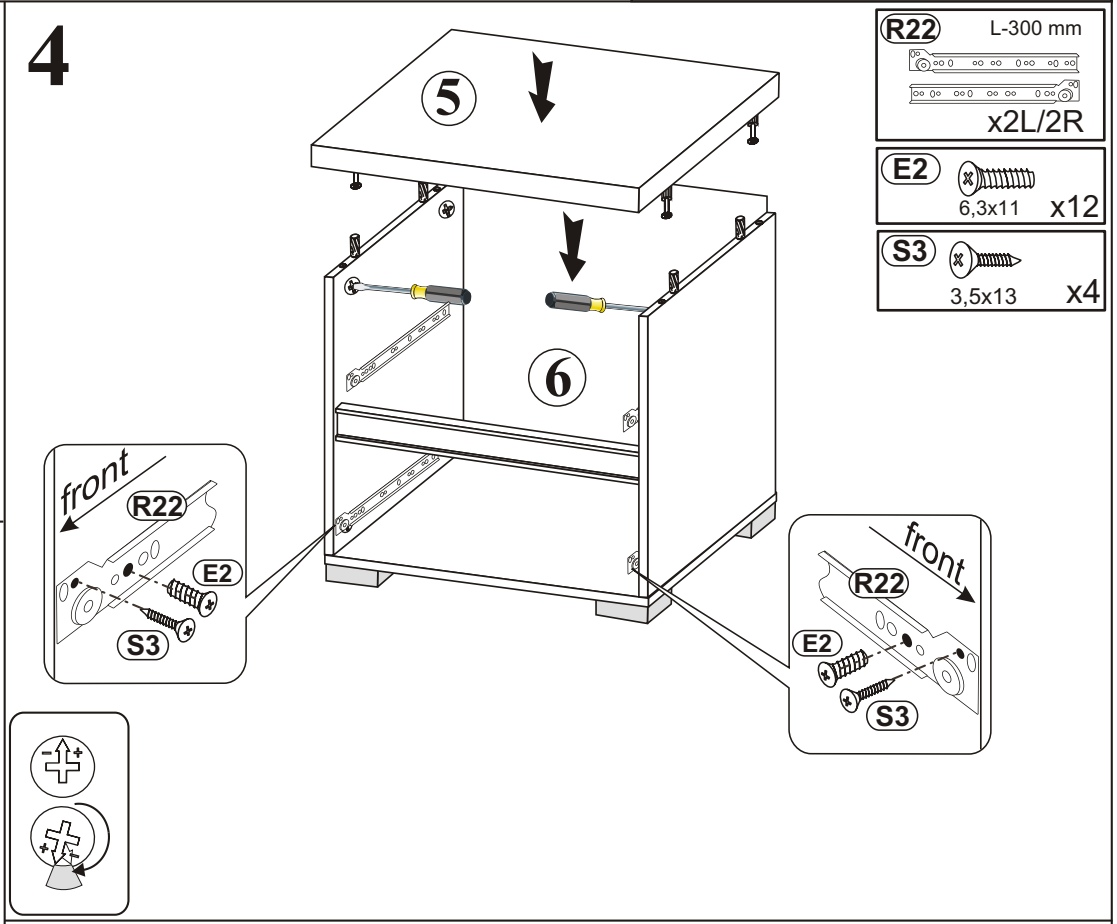
R22
L-300 mm
x2L/2R
E2
6,3x11
x12
S3
3,5x13
x4
5
6
front
R22
E2
S3
front
R22
E2
S3

5

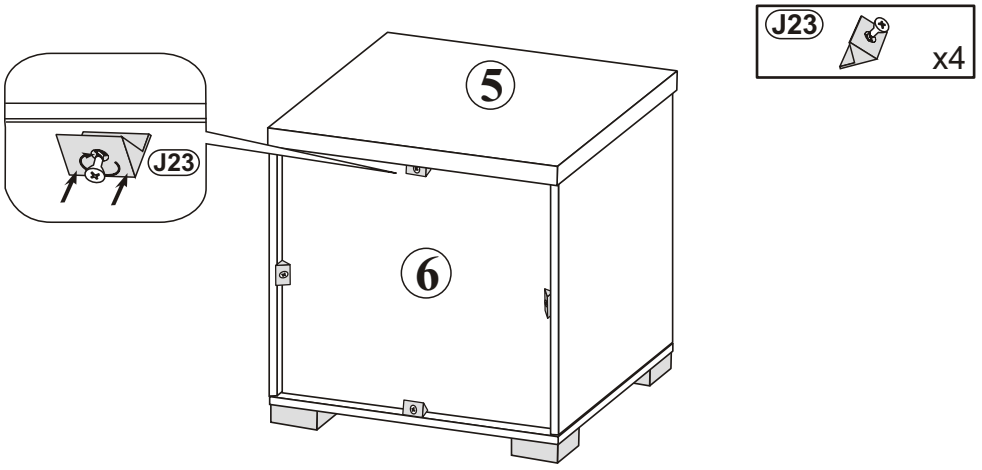
J23
x4
J23
5
6

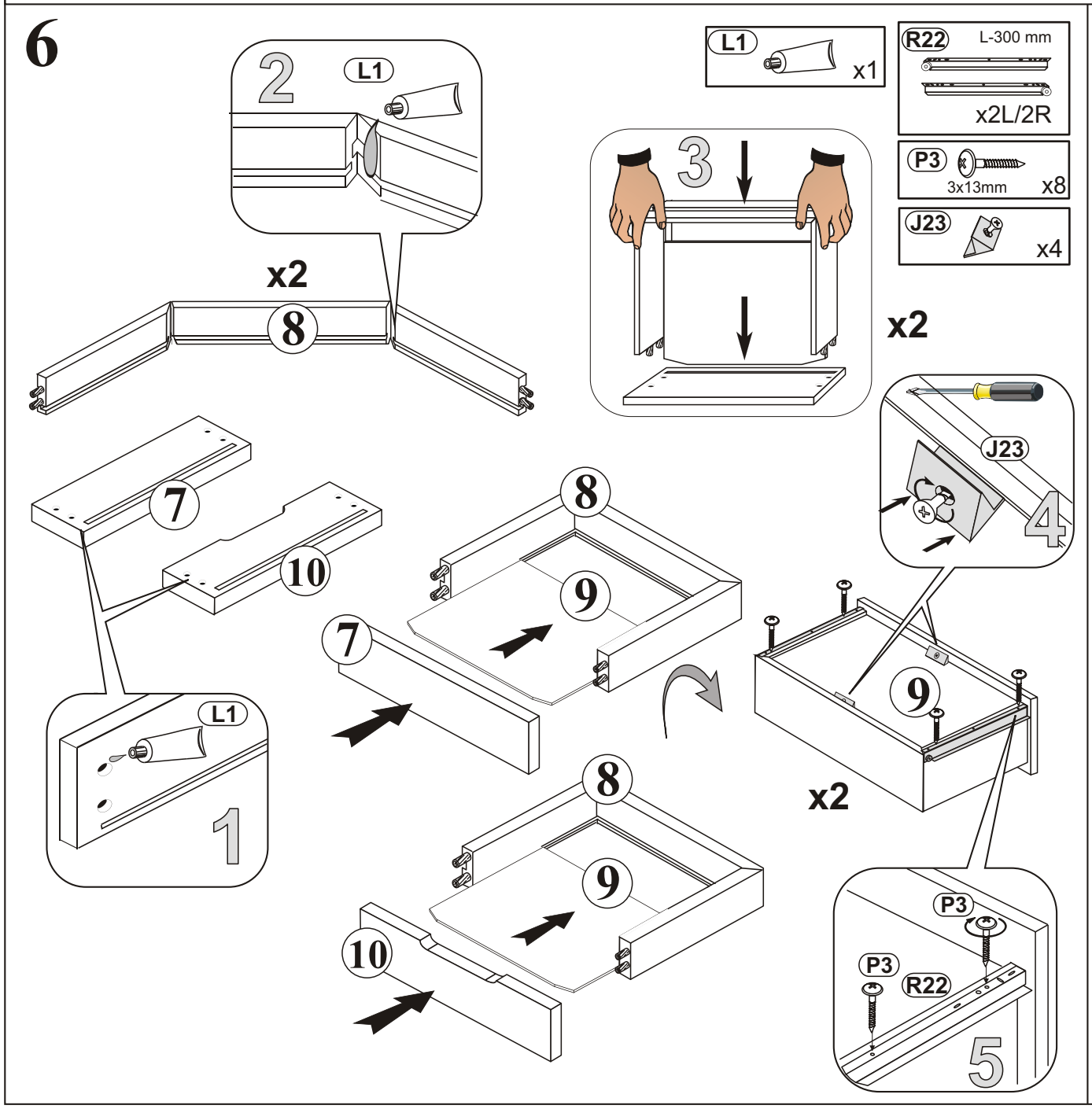
6
L1
x1
R22
L-300 mm
x2L/2R
P3
3x13mm
x8
J23
x4
2
L1
x2
8
3
x2
7
10
8
9
7
J23
4
9
L1
1
8
9
10
x2
P3
P3
R22
5

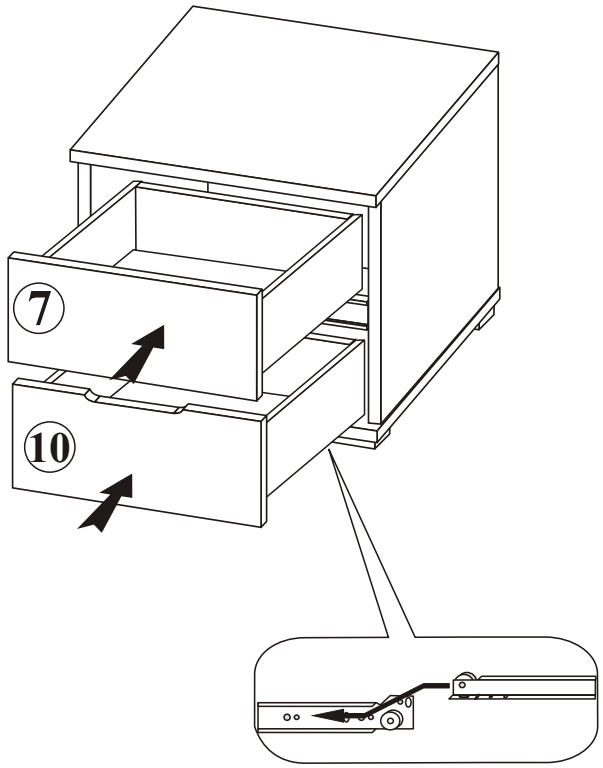
7
7
10