ŁÓŻKO / BED
HUGO

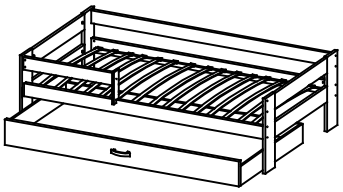

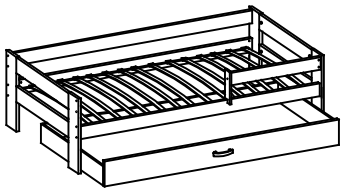

160

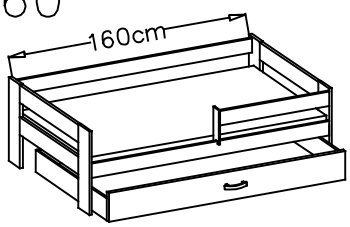

180

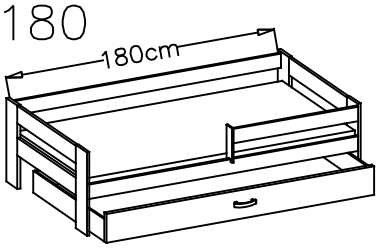

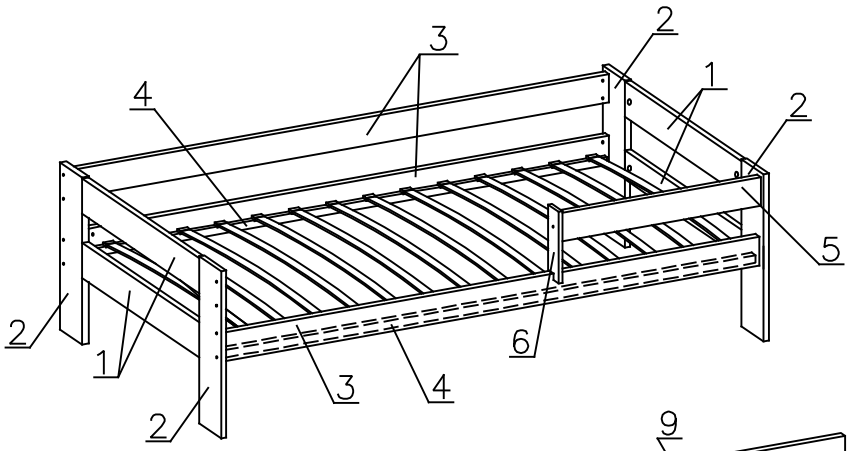

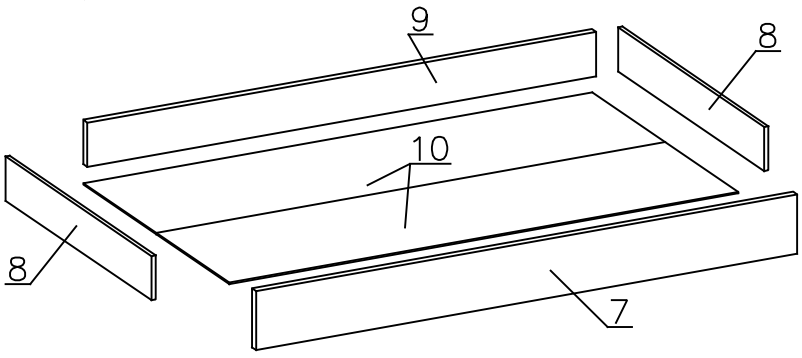

#	ILOŚĆ/QUANTITY
1	4
2	4
3	3
4	2
5	1
6	1
7	1
8	2
9	1
10	1

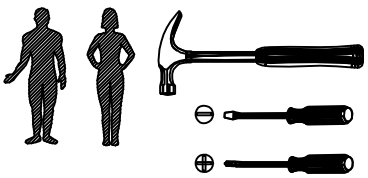

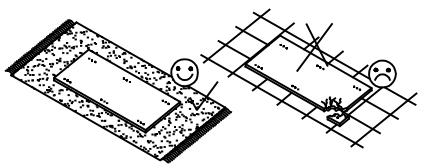

Manufacturer by:
EUROTEL Sp. z o.o.
MADE IN POLAND

Producent:
EUROTEL Sp. z o.o.
Wyprodukowano w Polsce

A	B	C	D	G	I	D1	D2
9	1	18	9	16	1	8	4
K	L	M	R	Y1	W	U	T
14	1	2	4	8	36	8	~30

H	S
28	14

1

3.5X35 G	I
16	1

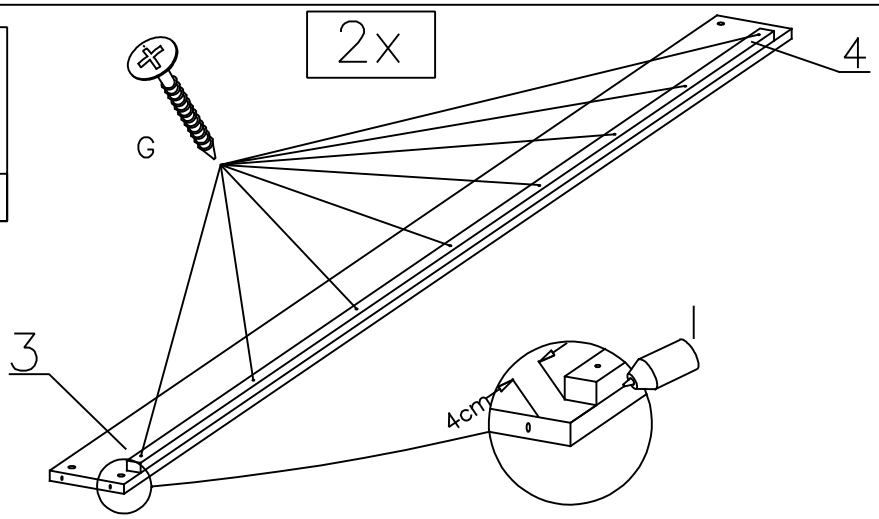

2

H	4.0X13 W
14	14

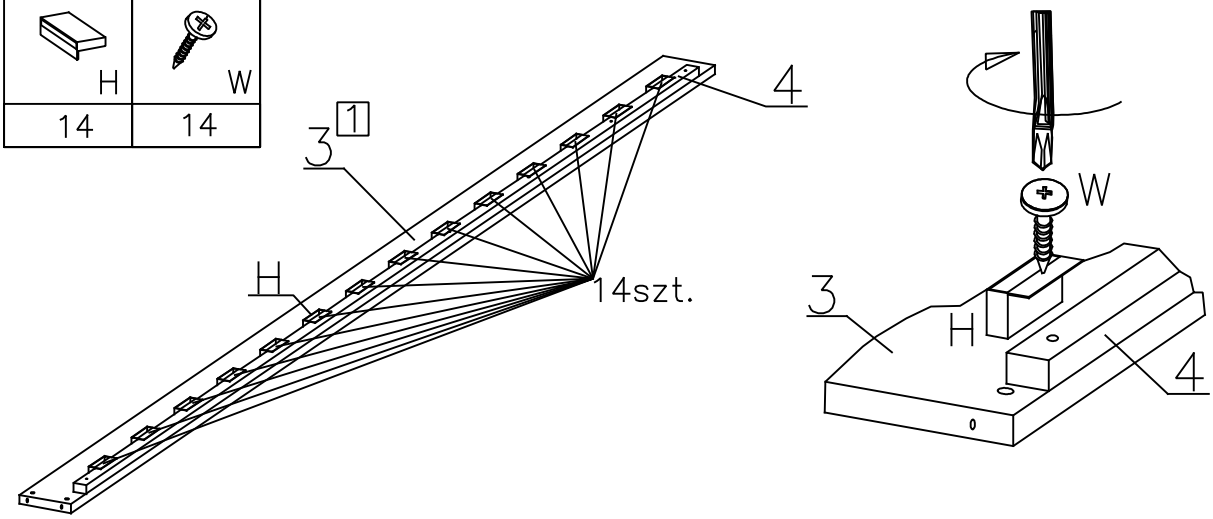

3

U	ø15X12 Y1	8.0X35 C
8	8	16
D1	I	
8	1	

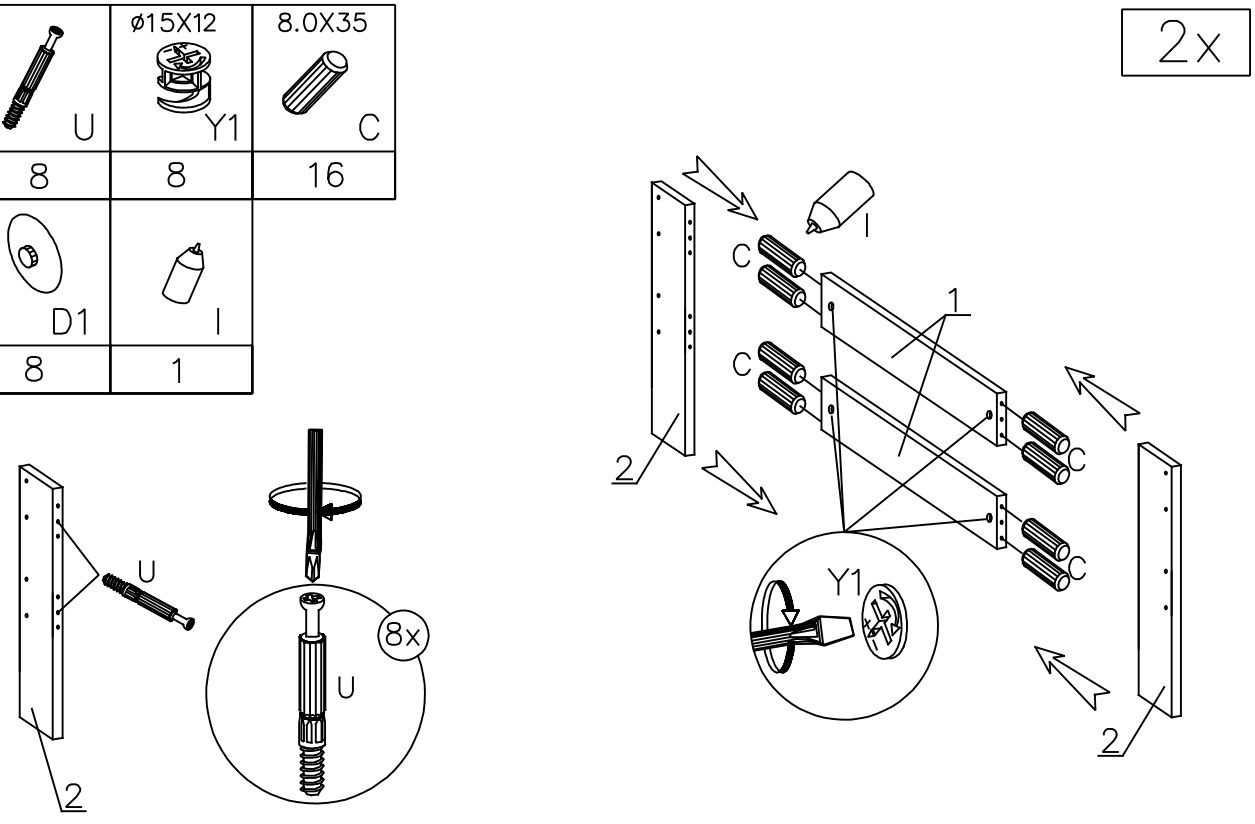

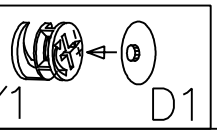

4

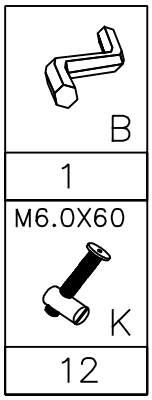
B
1
M6.0X60
K
12

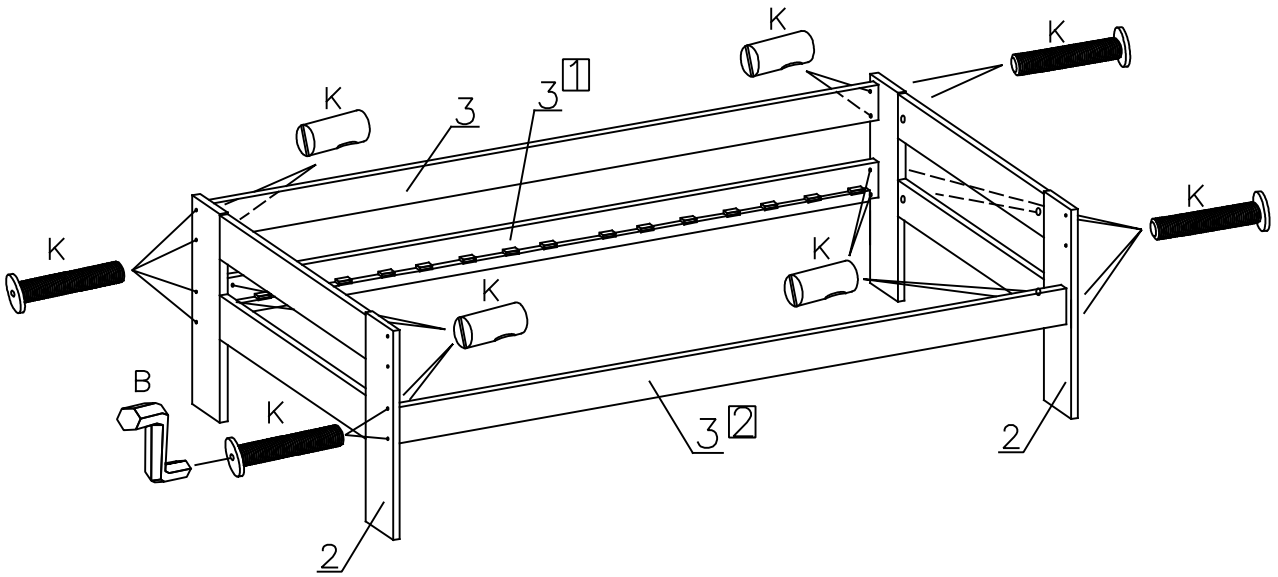
K
K
K
3
3 1
K
K
K
K
B
K
3 2
2
2

5

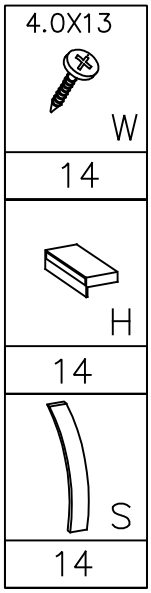
4.0X13
W
14
H
14
S
14

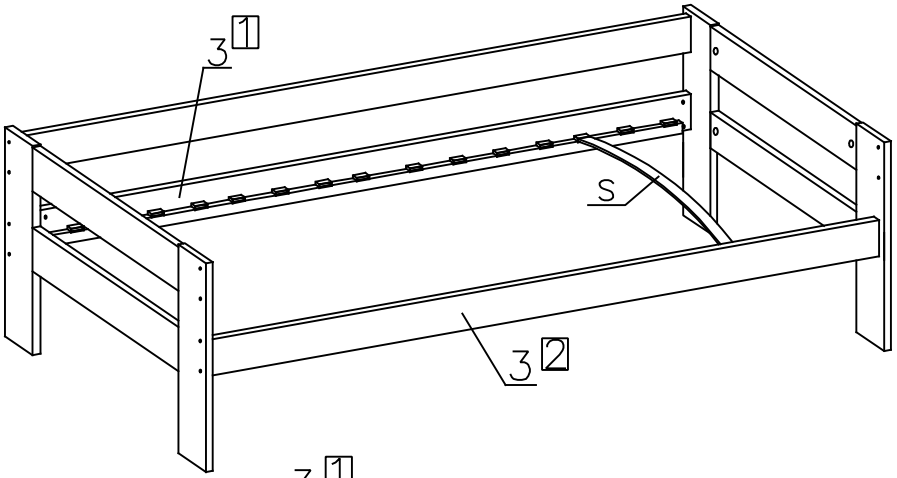
3 1
S
3 2

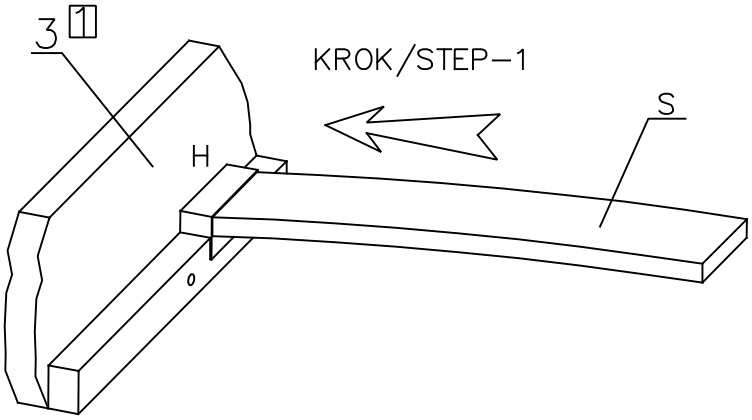
3 1
KROK/STEP-1
S
H

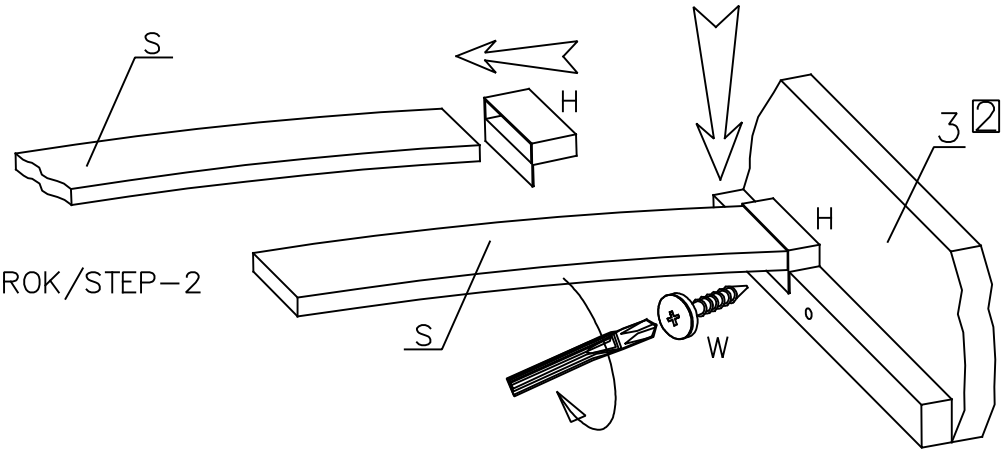
S
H
3 2
H
KROK/STEP-2
S
W

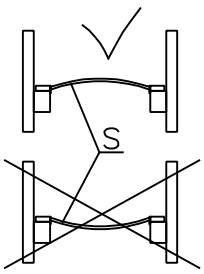
S

6A

D2	8.0X35 C	D	A	B	M6.0X60 K
4	2	1	1	1	2

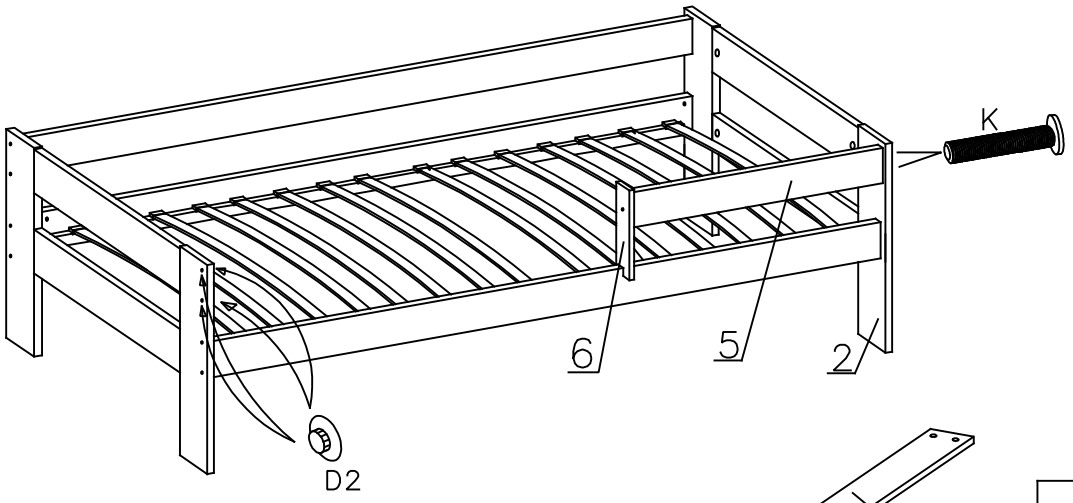

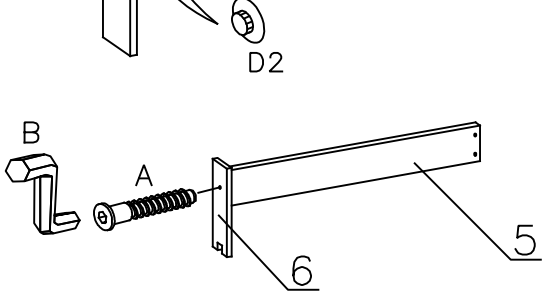

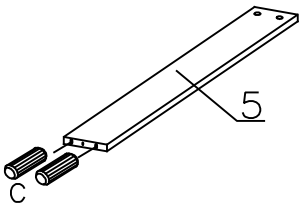

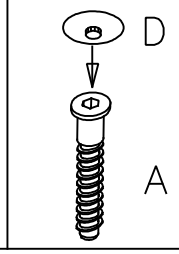

6B

D2	8.0X35 C	D	A	B	M6.0X60 K
4	2	1	1	1	2

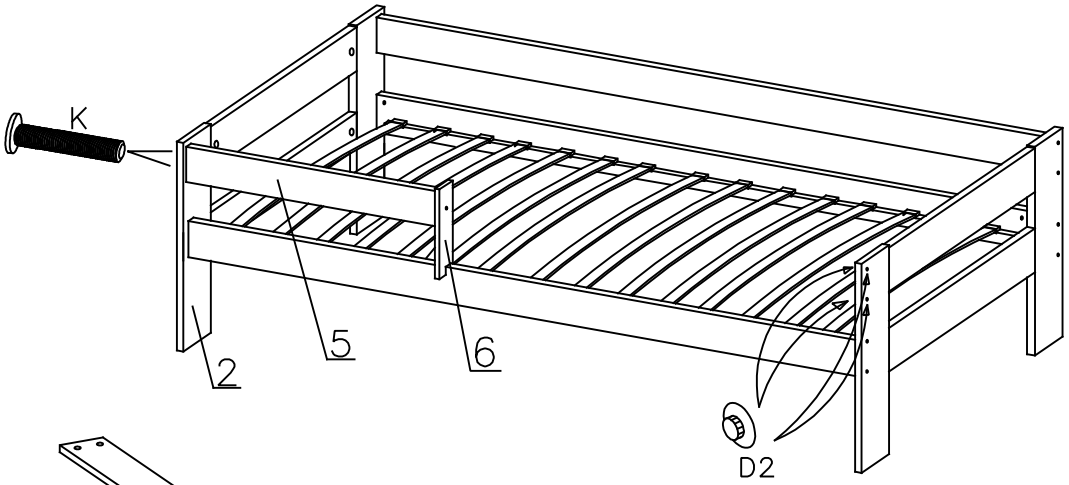

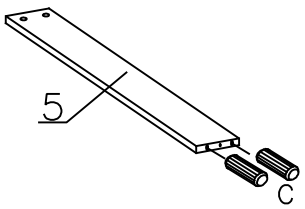

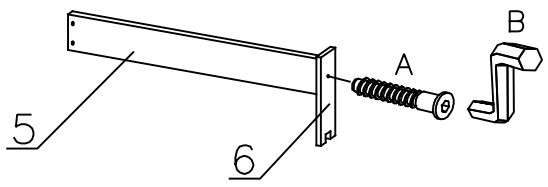

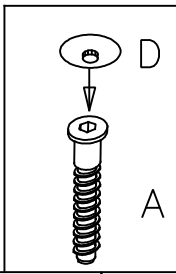

7

A	B	L	4.0X27 M	R	T	4.0X13 W	D
8	1	1	2	4	~30	8	8

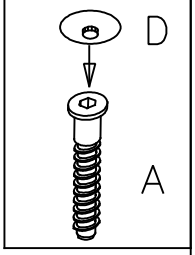

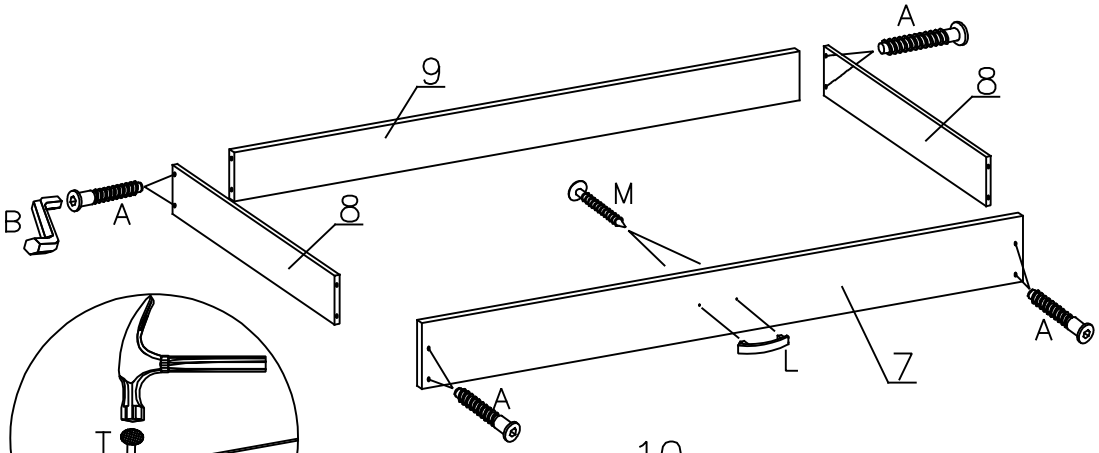

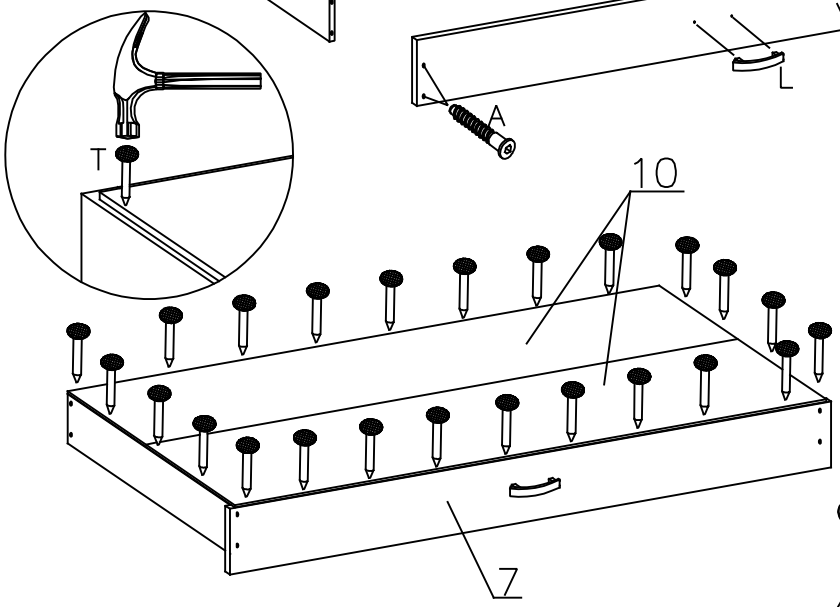

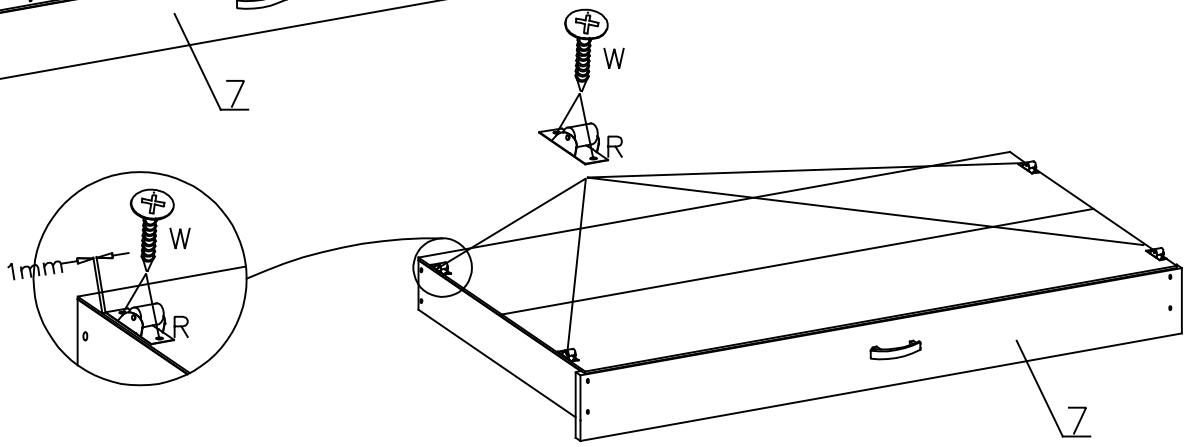
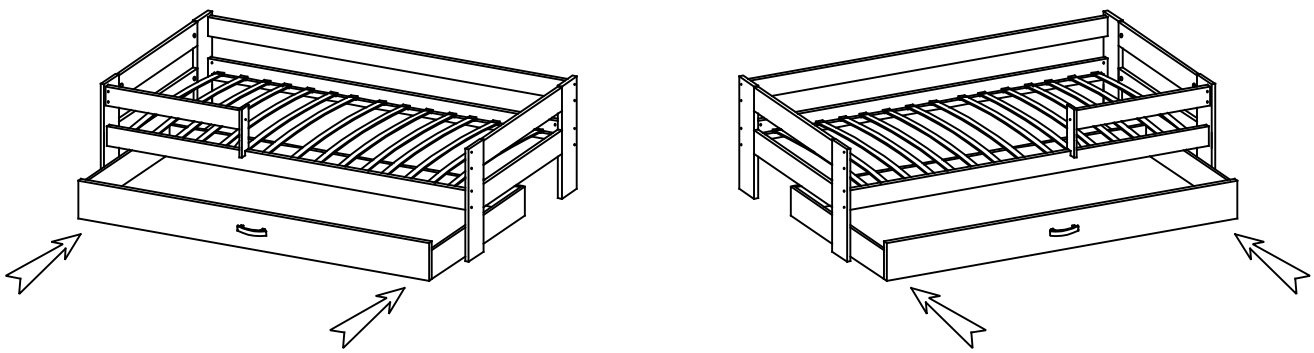
8