Q-03

ASSEMBLING INSTRUCTION

AX1



Bx1



Cx1(LxR)

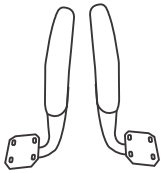

DX1

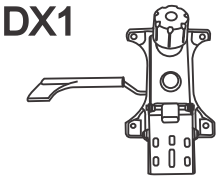

EX1

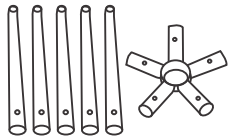

Fx5



GX1



H x1



Ix12



M6x20mm

Jx3



M8x20mm

K x3



M8x16mm

Lx3



M8x16mm

M x1



N x5



M6x14mm

①

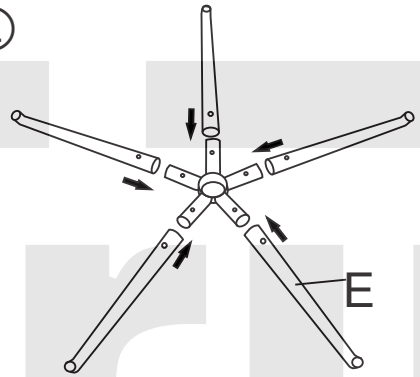

②

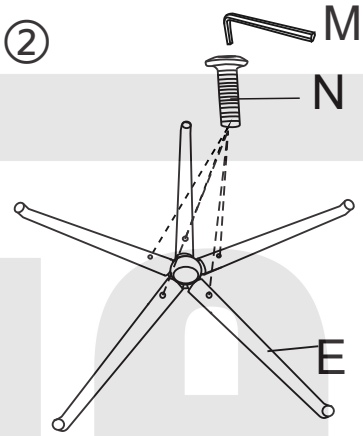

③

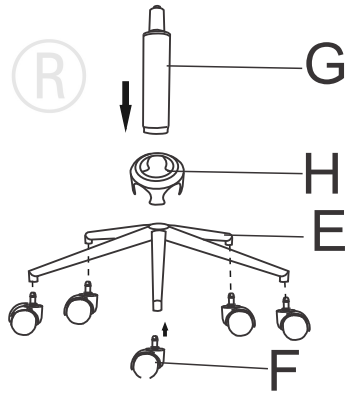

④

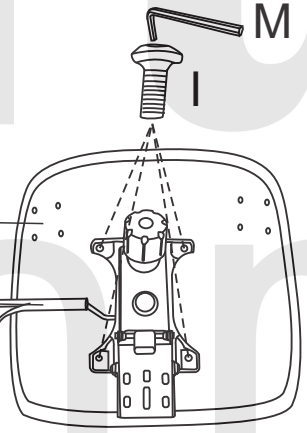

⑤

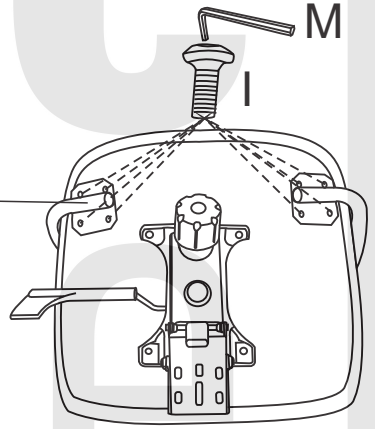

⑥

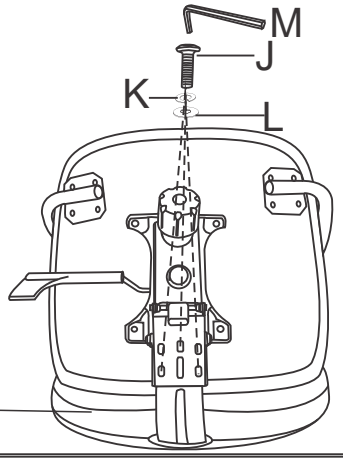

⑦

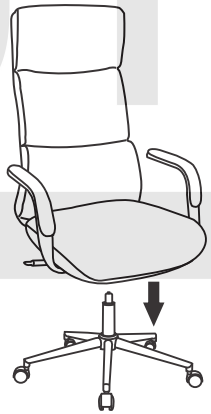

⑧

